FILE No. : DRAWING-2023/STD. G.A./RVL181-D-P (15W LED)

ALL DIMENSIONS ARE IN MM UNLESS OTHERWISE SPECIFIED.

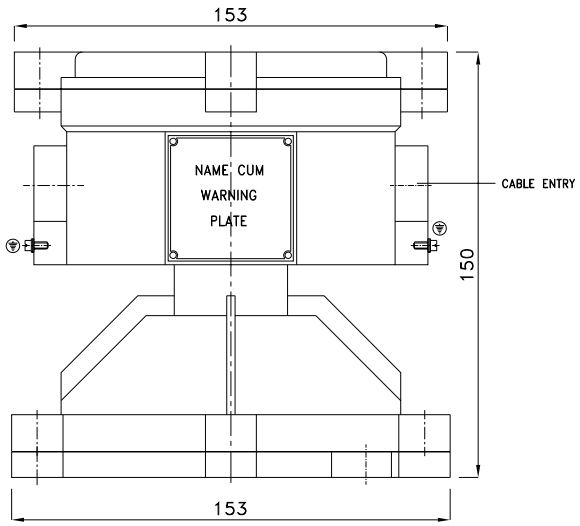

FRONT VIEW OF HAND LAMP

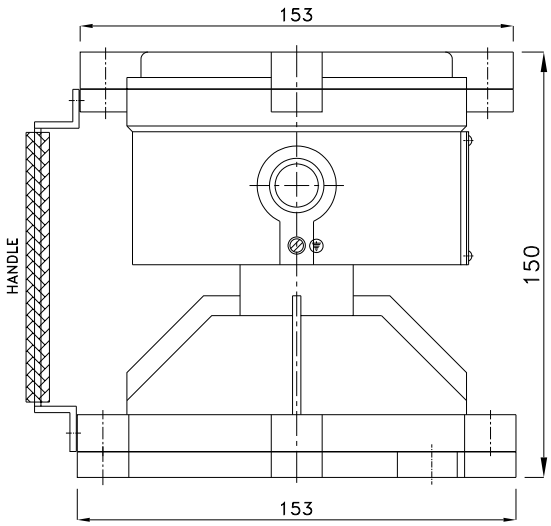

SIDE VIEW OF HAND LAMP

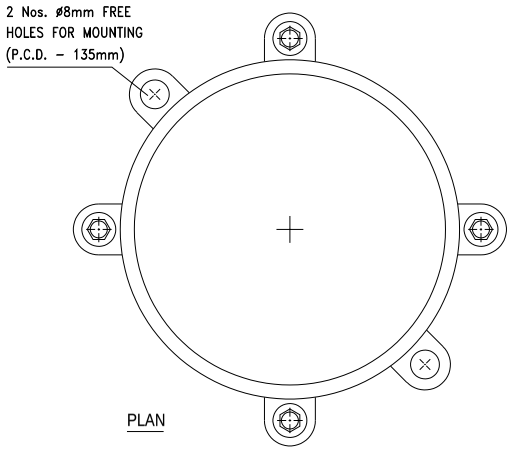

PLAN

Reference IS/IEC Standard as follows :

1 - FLAMEPROOF (Ex d) PROTECITON - IIA/IIB & IIC, IS/IEC 60079-1 (2014)
. . TEMPERATURE CLASS - T6
2 - INGRESS (IP) PROTECITON - IP:66, IS/IEC 60529 (2001). (Reaffirmed 2014)

Standard Specification :

1 - MATERIAL - CAST ALUMINIUM ALLOY
2 - FINISH - INSIDE & OUTSIDE LIGHT GREY EPOXY POWDER COATING SHADE No. 631 AS PER IS:5
3 - EARTHING - 1 No. INSIDE & 2 Nos. OUTSIDE M6 SIZE S.S./BRASS SCREWS WITH 2 Nos. PLAIN WASHER
4 - HARDWARE - STAINLESS STEEL
5 - GASKET - 'O' RING ENDLESS NEOPRENE RUBBER GASKET
6 - MOUNTING ARRGT. - AS SHOWN IN DRG.

Material / Components Specification :

1 - S.S. NAME CUM WARNING PLATE (WITH DESCRIPTION TITLE, CIMFR, PESO,
. . SR. NO., GAS GROUP, RATING, BIS MARKING, WARNING STATUS, etc....)
2 - GLASS - HEAT RESISTANCE CLEAR TOUGHENED GLASS 'TYPE-A' OF
. . 'SUDHIR' BRAND
3 - CABLE ENTRIES - 1 No. M20 / 1/2" NPT / 3/4" ET SIZE CABLE
. . ENTRIES FROM SIDE (REFER DRAWING)
4 - LIGHT FITTING - 15 WATTS LED WITH DRIVER (INBUILT)
. . .
. . .
. . .
. . .
. . .
. . .
. . .
. . .
. . .

Light Fitting Standard Specification :

a) WATTAGE	:	15 WATTS
b) VOLTAGE	:	140V-270V AC
c) POWER FACTOR	:	$\geq$0.95
d) INPUT FREQUENCY	:	50 Hz
e) EFFICACY	:	$\geq$100 LUMEN PER WATT
f) COLOUR (CCT)	:	3000K/5700K/6500K/OR AS SPECIFIED
g) CRI	:	$\geq$80 RA
h) TOTAL HARMONIC DISTORTION	:	$\leq$ 10% THD
i) SURGE PROTECTION	:	10 KV SPD
j) SURFACE TEMPERATURE	:	MAX. 70°

Light Fitting OPTIONS :

1) MATERIAL CONSTRUCTION	:	STAINLESS STEEL
2) VOLTAGE	:	220V DC/110V AC/110V DC/24V AC
3) GLASS TYPE	:	FLAT
4) LED MAKE	:	CITIZEN/OSRAM/BRIDGELUX/EQUIVALENT
5) DRIVER MAKE	:	OSRAM/PHILIPS/FULHAM/EQUIVALENT
6) CABLE GLAND & PLUG	:	BRASS/S.S./ALUMINIUM

THIS DRAWING IS PROPERTY OF "SUDHIR SWITCHGEARS PVT. LTD." AND MUST BE RETURNED ON REQUEST IT IS SUBMITTED AS CONFIDENTIAL INFORMATION IN CONNECTION WITH ENQUIRY, TENDER, ORDER, OR CONTRACTS IT IS NOT TO BE USED FOR ANY OTHER PURPOSE OR ORDER NOR MAY IT RE-COPIED OR LENT WITHOUT OUR AUTHORITY IN WRITING.

NOTE :

- COMPONENT LAYOUT IS TENTATIVE RELOCATION OF PARTS & COMPONENTS IS POSSIBLE AT THE TIME OF ACTUAL MANUFACTURING.
- OVERALL DIMENSIONS ARE ±10mm

REV.	DATE	DESCRIPTION	DRN.	CHKD.	APPD.
◁	.	.	.	.	.
◁	.	.	.	.	.
◁	.	.	.	.	.

CAT. No. RVL/2C/181

MODEL No.: RVL/181/15-D

DRN.	prafull	
CHKD.	AKSHAY	
APPD.	.	
SHEET	1 OF 1	
SCALE	N. T. S.	REV.- 0

SUDHIR® SUDHIR SWITCHGEARS PVT. LTD.
130, MUMBAI SAMACHAR MARG, MUMBAI - 400 023

TITLE : FLAMEPROOF-WEATHERPROOF ENCLOSURE SUITABLE FOR HAND LAMP FITTING

CMRI. CERT. No.	PESO No. :	BIS LICENCE No. :
IN/CIMFR/TR21/P/H176 Dt. 11/08/2021	. .	CM/L-0002914461

FILE No. : DRAWING-2023/STD. G.A./RVL181-C-P (15W LED)

ALL DIMENSIONS ARE IN MM UNLESS OTHERWISE SPECIFIED.

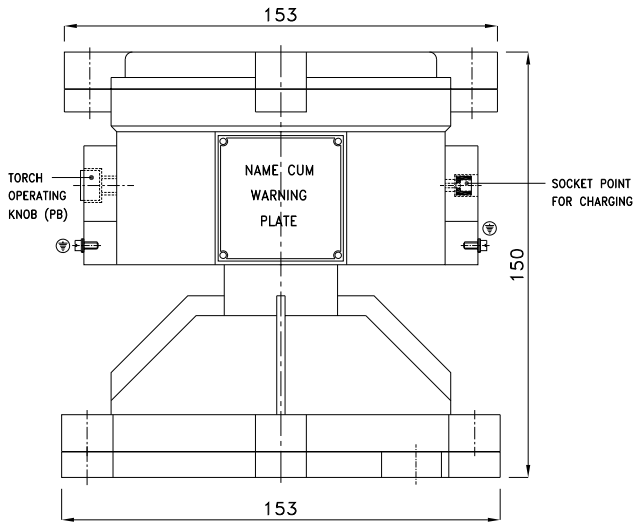

FRONT VIEW OF VESSEL LAMP

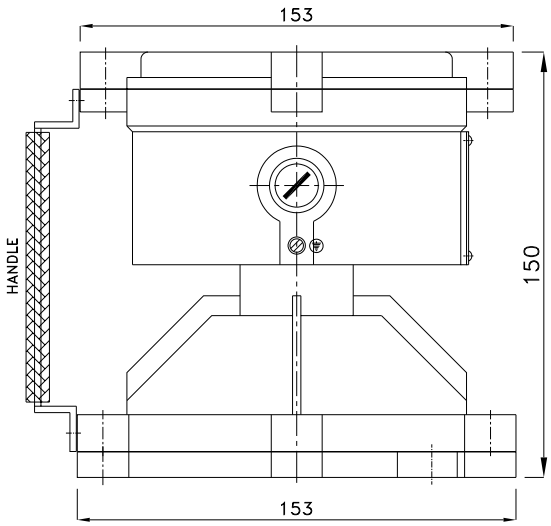

SIDE VIEW OF VESSEL LAMP

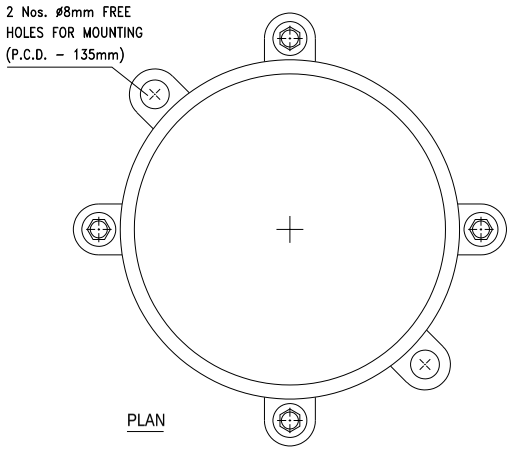

PLAN

Reference IS/IEC Standard as follows :

1 - FLAMEPROOF (Ex d) PROTECITON - IIA/IIB & IIC, IS/IEC 60079-1 (2014)
. . TEMPERATURE CLASS - T6
2 - INGRESS (IP) PROTECITON - IP:66, IS/IEC 60529 (2001). (Reaffirmed 2014)

Standard Specification :

1 - MATERIAL - CAST ALUMINIUM ALLOY
2 - FINISH - INSIDE & OUTSIDE LIGHT GREY EPOXY POWDER COATING SHADE No. 631 AS PER IS:5
3 - EARTHING - 1 No. INSIDE & 2 Nos. OUTSIDE M6 SIZE S.S./BRASS SCREWS WITH 2 Nos. PLAIN WASHER
4 - HARDWARE - STAINLESS STEEL
5 - GASKET - 'O' RING ENDLESS NEOPRENE RUBBER GASKET
6 - MOUNTING ARRGT. - AS SHOWN IN DRG.

Material / Components Specification :

1 - S.S. NAME CUM WARNING PLATE (WITH DESCRIPTION TITLE, CIMFR, PESO,
. . SR. NO., GAS GROUP, RATING, BIS MARKING, WARNING STATUS, etc....)
2 - GLASS - HEAT RESISTANCE CLEAR TOUGHENED GLASS 'TYPE-A' OF
. . 'SUDHIR' BRAND
3 - CABLE ENTRIES - 1 No. M20 / 1/2" NPT / 3/4" ET SIZE CABLE
. . ENTRIES FROM SIDE (REFER DRAWING)
4 - RECHAGRABLE TYPE LIGHT FITTING WITH FOLLOWING DETAIL :
. . A) 15 WATTS LED WITH DRIVER (INBUILT)
. . B) 2 Nos. 3.2 VOLTS, 1.25 ah, LITHIUM / NI-CADMIUM RECHARGABLE
. . BATTERY
. . .
. . .
. . .
. . .
. . .
. . .

Light Fitting Standard Specification :

a) WATTAGE	:	15 WATTS
b) VOLTAGE	:	140V-270V AC
c) POWER FACTOR	:	≥0.95
d) INPUT FREQUENCY	:	50 Hz
e) EFFICACY	:	≥100 LUMEN PER WATT
f) COLOUR (CCT)	:	3000K/5700K/6500K/OR AS SPECIFIED
g) CRI	:	≥80 RA
h) TOTAL HARMONIC DISTORTION	:	≤ 10% THD
i) SURGE PROTECTION	:	10 KV SPD
j) SURFACE TEMPERATURE	:	MAX. 70°

Light Fitting OPTIONS :

1) MATERIAL CONSTRUCTION	:	STAINLESS STEEL
2) VOLTAGE	:	220V DC/110V AC/110V DC/24V AC
3) GLASS TYPE	:	FLAT
4) LED MAKE	:	CITIZEN/OSRAM/BRIDGELUX/EQUIVALENT
5) DRIVER MAKE	:	OSRAM/PHILIPS/FULHAM/EQUIVALENT
6) CABLE GLAND & PLUG	:	BRASS/S.S./ALUMINIUM

THIS DRAWING IS PROPERTY OF "SUDHIR SWITCHGEARS PVT. LTD." AND MUST BE RETURNED ON REQUEST IT IS SUBMITTED AS CONFIDENTIAL INFORMATION IN CONNECTION WITH ENQUIRY, TENDER, ORDER, OR CONTRACTS IT IS NOT TO BE USED FOR ANY OTHER PURPOSE OR ORDER NOR MAY IT RE-COPIED OR LENT WITHOUT OUR AUTHORITY IN WRITING.

NOTE :

- COMPONENT LAYOUT IS TENTATIVE RELOCATION OF PARTS & COMPONENTS IS POSSIBLE AT THE TIME OF ACTUAL MANUFACTURING.
- OVERALL DIMENSIONS ARE ±10mm

REV.	DATE	DESCRIPTION	DRN.	CHKD.	APPD.
◁	.	.	.	.	.
◁	.	.	.	.	.
◁	.	.	.	.	.

CAT. No. RVL/2C/181

MODEL No.: RVL/181/15-C

DRN.	prafull	
CHKD.	AKSHAY	
APPD.	.	
SHEET	1 OF 1	
SCALE	N. T. S.	REV.- 0

SUDHIR® SUDHIR SWITCHGEARS PVT. LTD.
130, MUMBAI SAMACHAR MARG, MUMBAI - 400 023

TITLE : FLAMEPROOF-WEATHERPROOF ENCLOSURE SUITABLE FOR EMERGENCY LIGHT (BATTERY BACKUP) FITTING

CMRI. CERT. No.	PESO No. :	BIS LICENCE No. :
IN/CIMFR/TR21/P/H176 Dt. 11/08/2021	. .	CM/L-0002914461